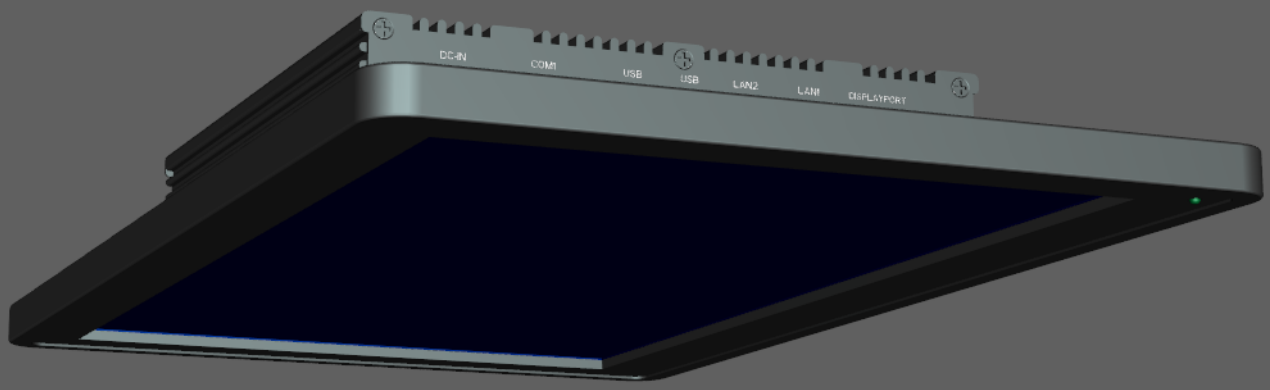
DC-IN
COM1
USB
USB
LAN2
LAN1
DISPLAYPORT

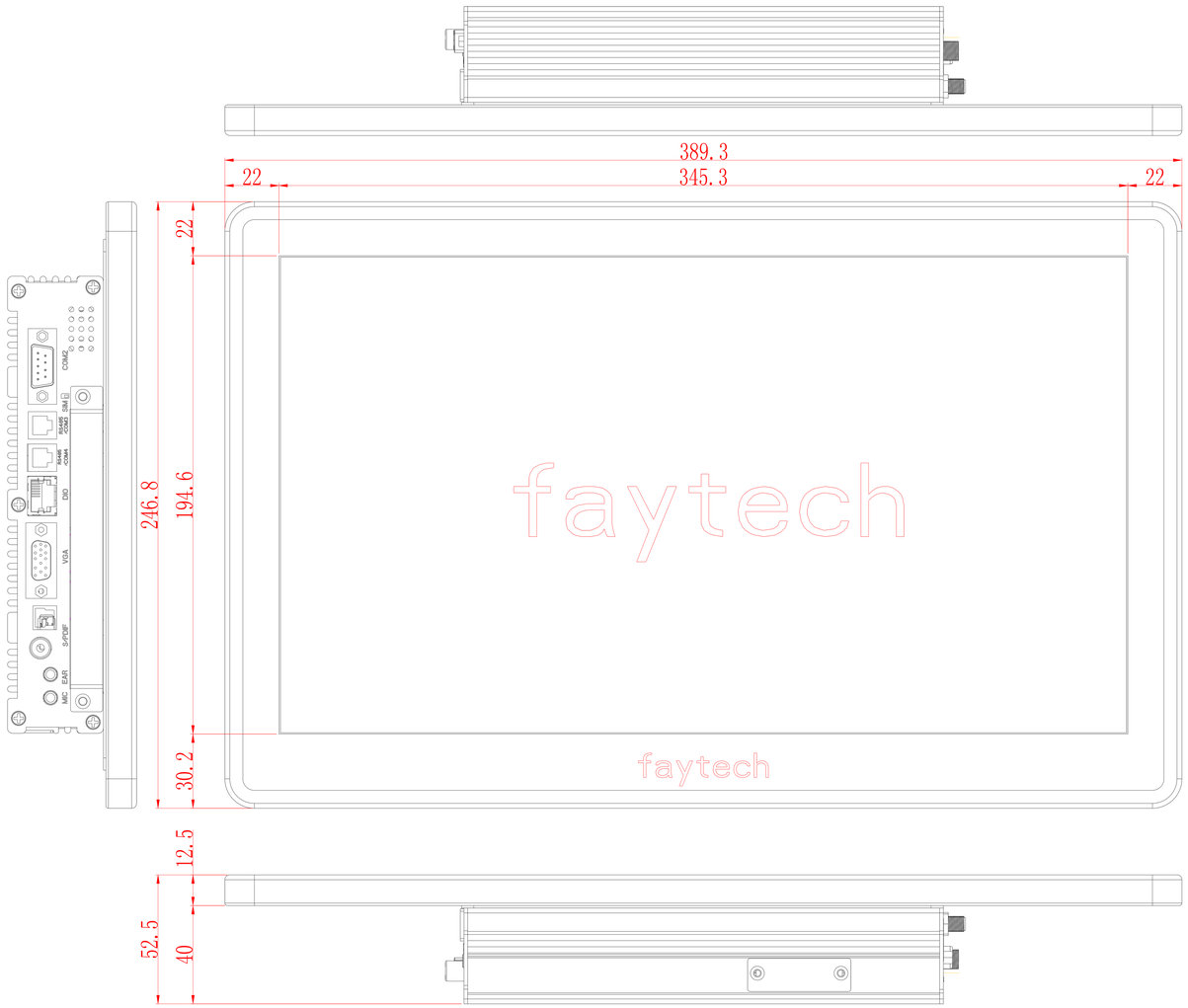
389.3
22
345.3
22
22
246.8
194.6
30.2
12.5
52.5
40
faytech
faytech
COM2
SIM
RJ45 COM5
RJ45 COM4
DIO
VGA
S/PDIF
EAR
MIC

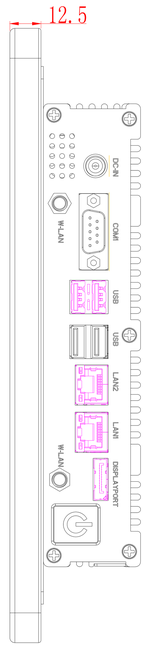
12.5
DC IN
COM1
WLAN
USB
USB
LAN2
LAN1
DISPLAYPORT
WLAN

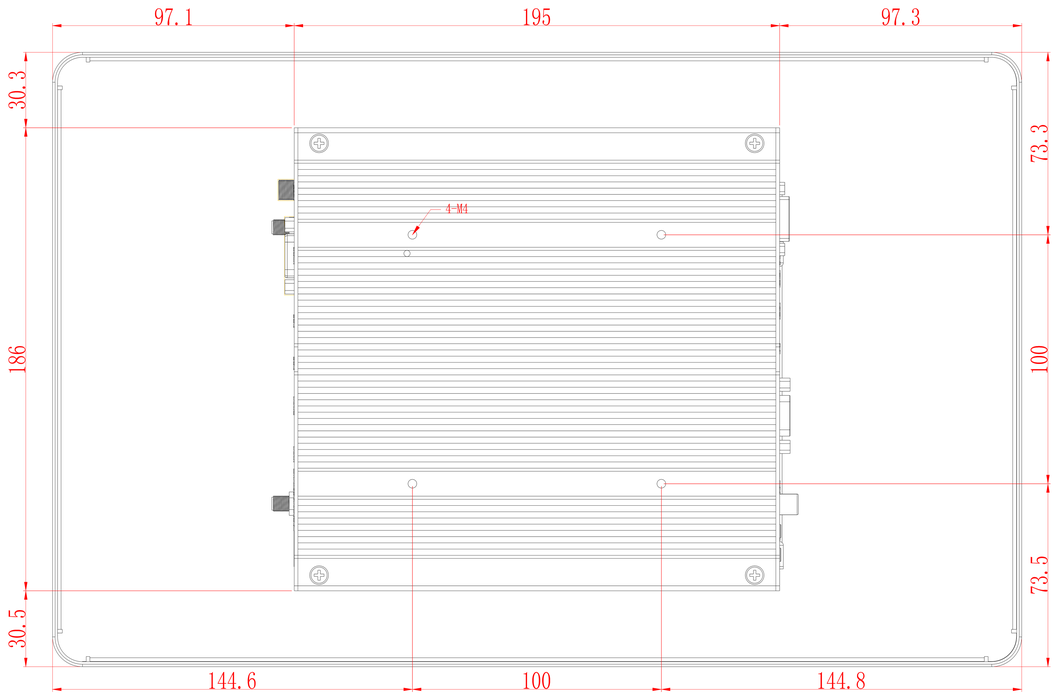
97.1
195
97.3
30.3
186
30.5
73.3
100
73.5
4-M4
144.6
100
144.8