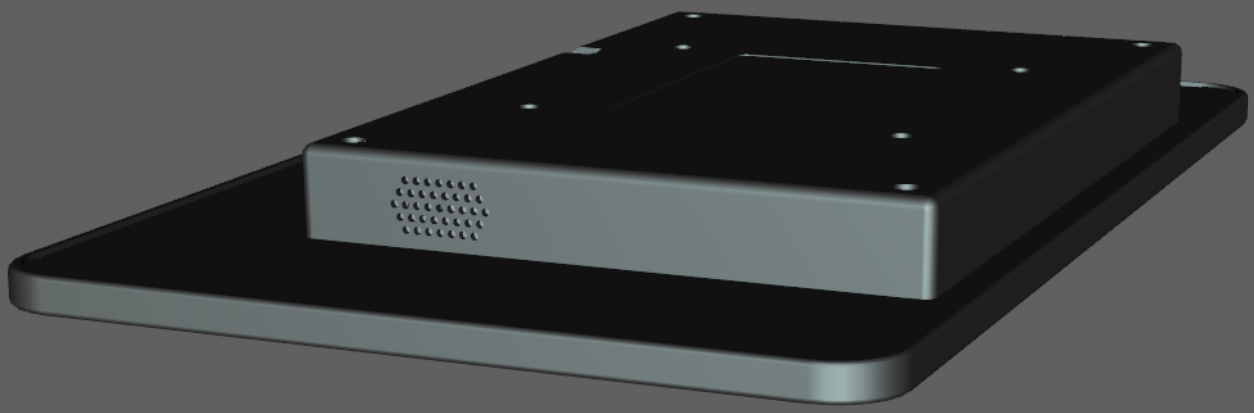

Autodesk

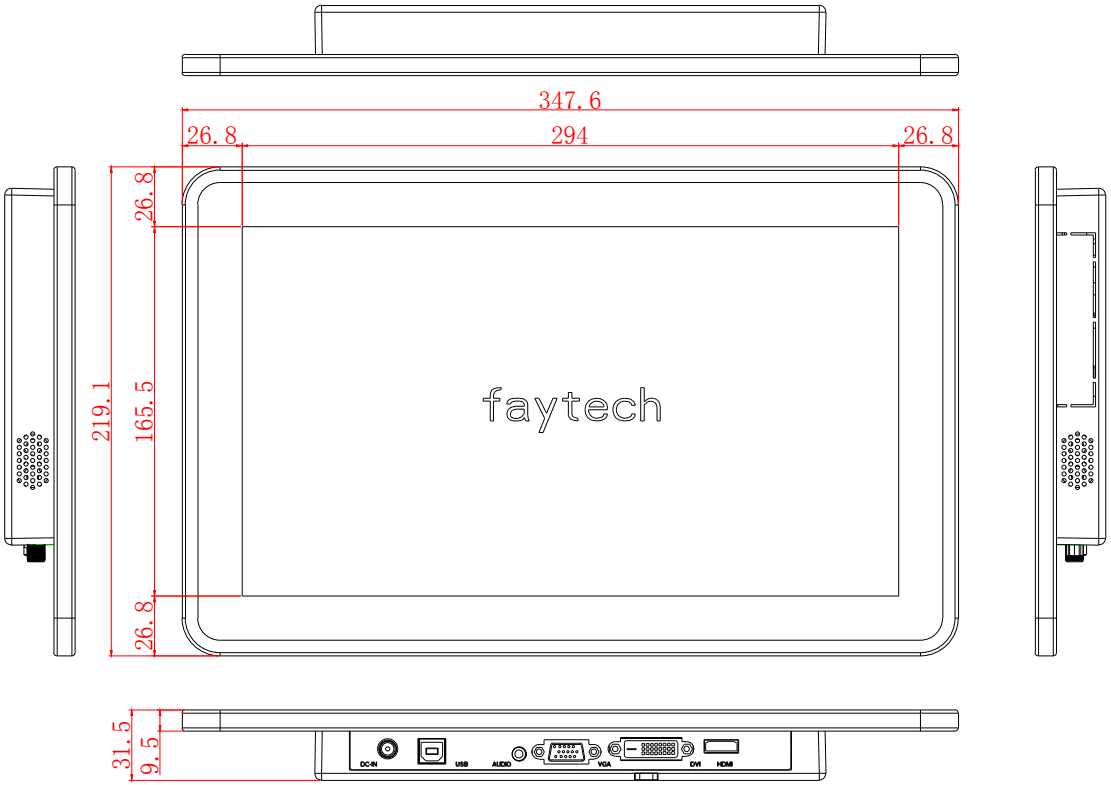

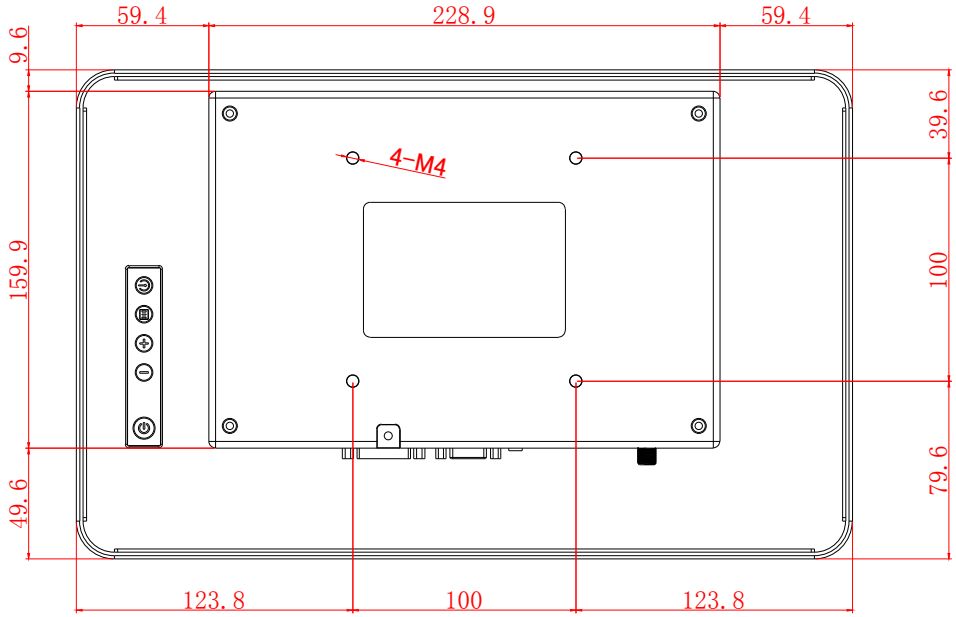

Autodesk

Autodesk

Autodesk