E-SATA

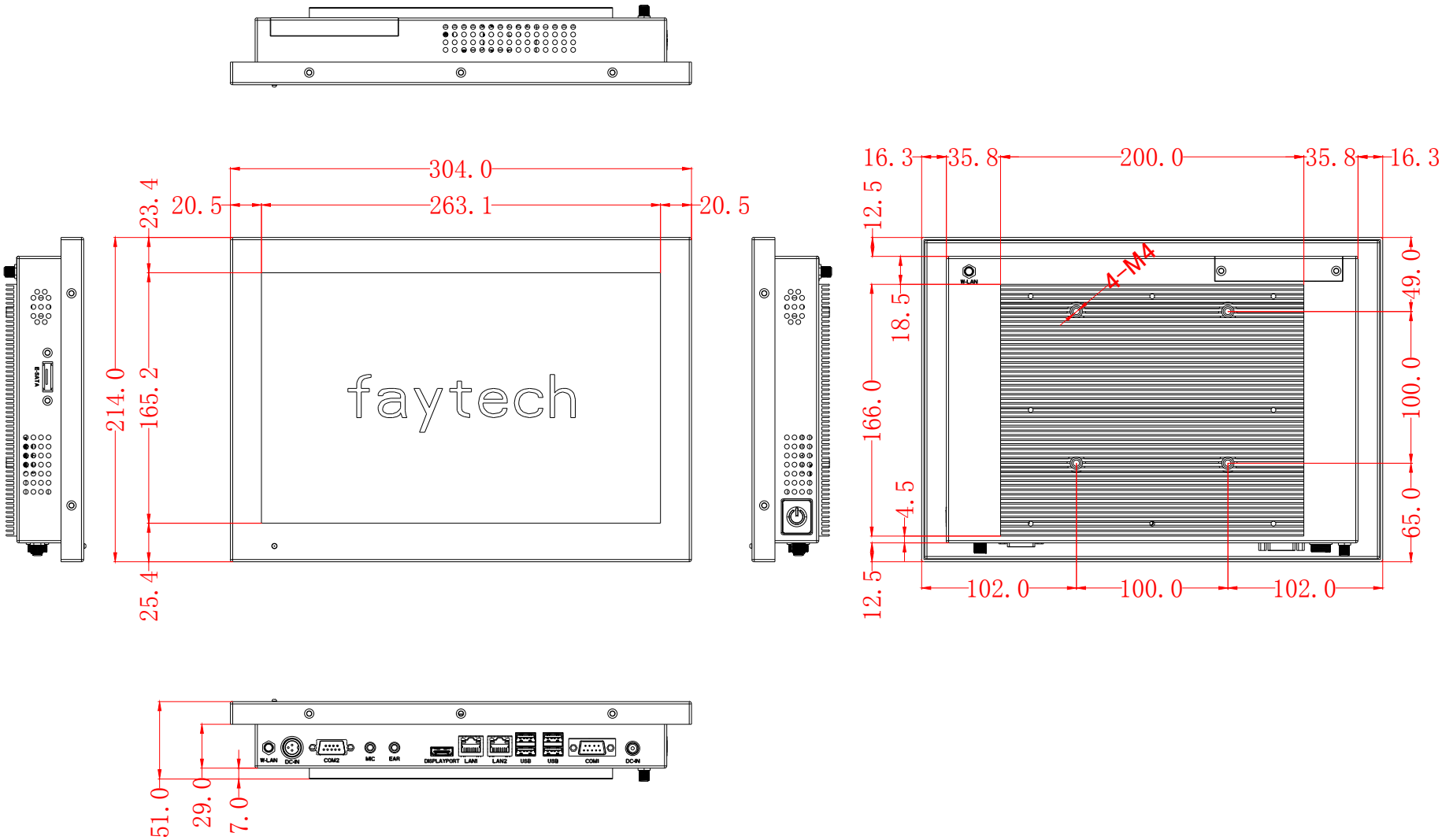
304.0
20.5
263.1
20.5
23.4
214.0
165.2
25.4
faytech
16.3
35.8
200.0
35.8
16.3
12.5
18.5
166.0
4.5
12.5
4-M4
49.0
100.0
65.0
102.0
100.0
102.0
51.0
29.0
7.0
W-LAN
DC-IN
COM2
MIC
EAR
DISPLAYPORT
LAN1
LAN2
USB
USB
COM1
DC-IN